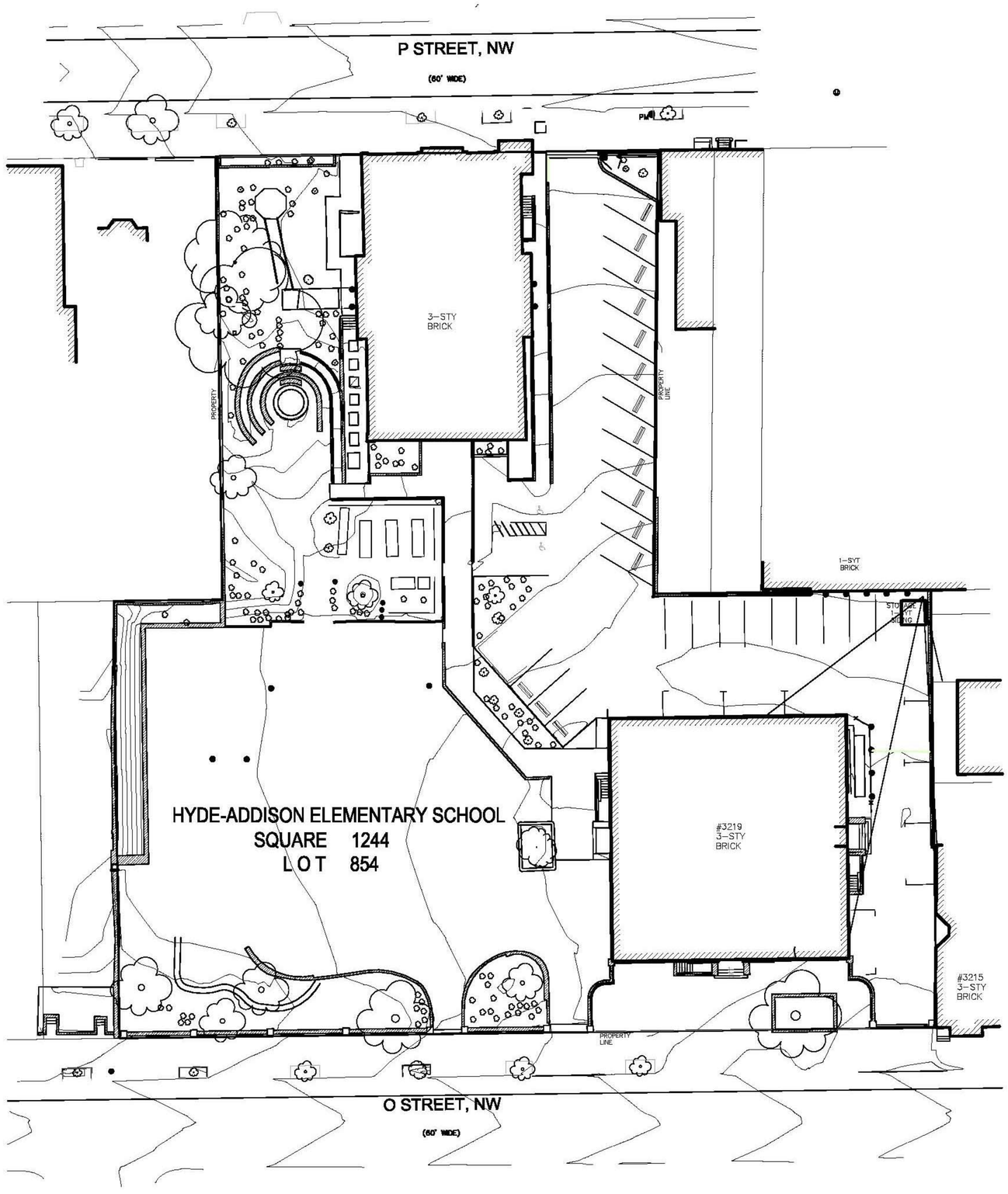
P STREET, NW
(60' WIDE)
3–STY
BRICK
PROPERTY
PROPERTY
LINE
1–SYT
BRICK
HYDE-ADDISON ELEMENTARY SCHOOL
SQUARE 1244
LOT 854
#3219
3–STY
BRICK
#3215
3–STY
BRICK
PROPERTY
LINE
O STREET, NW
(60' WIDE)

Addition

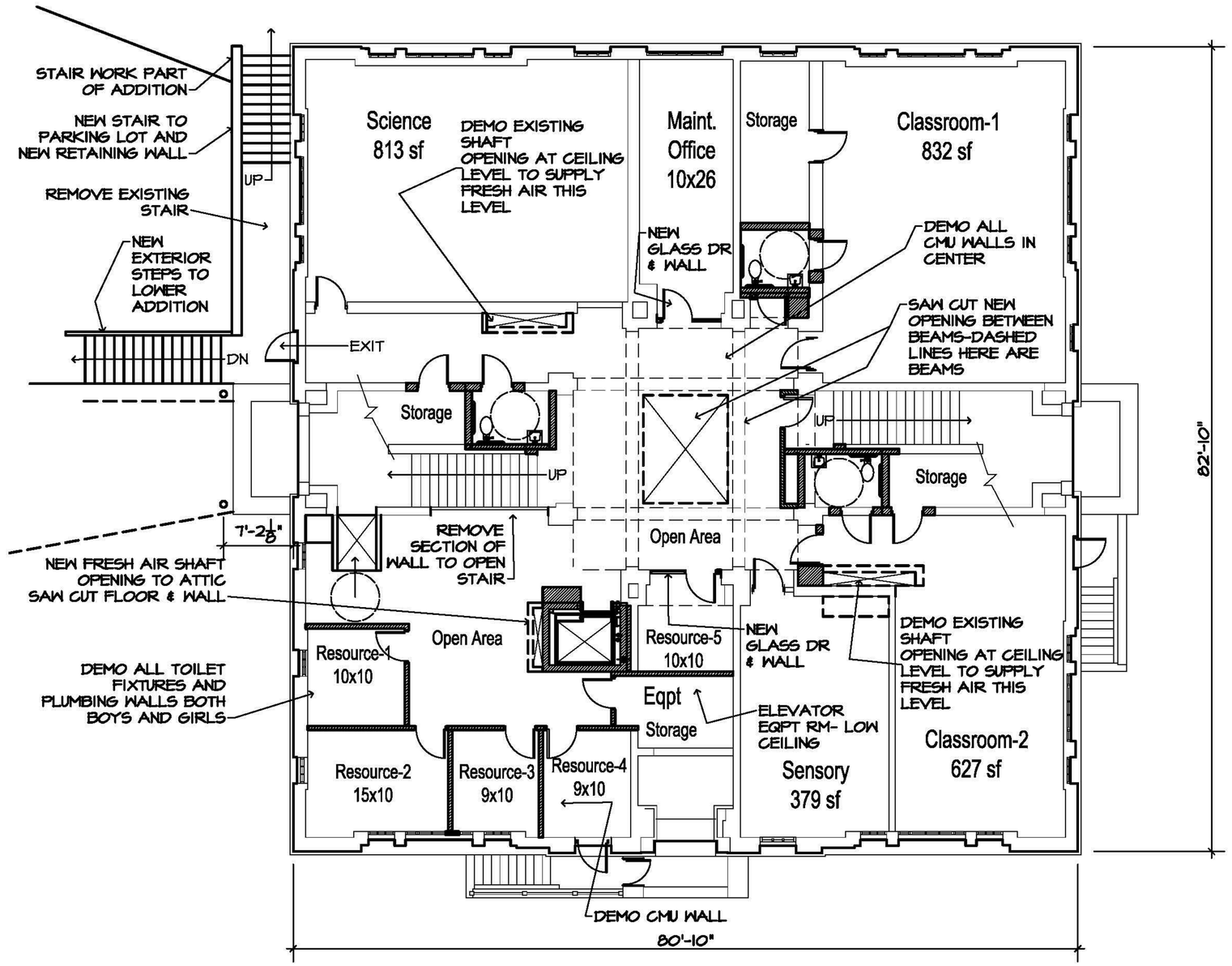

0- Street

A-1.0

1 FIRST LEVEL

SCALE: 3/32= 1'-0" 12-23-2013

DEMO Layer OFF

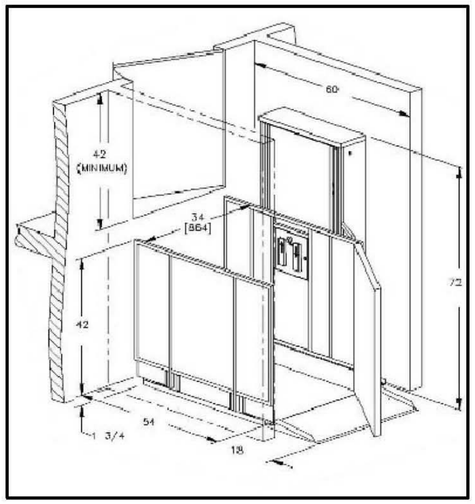

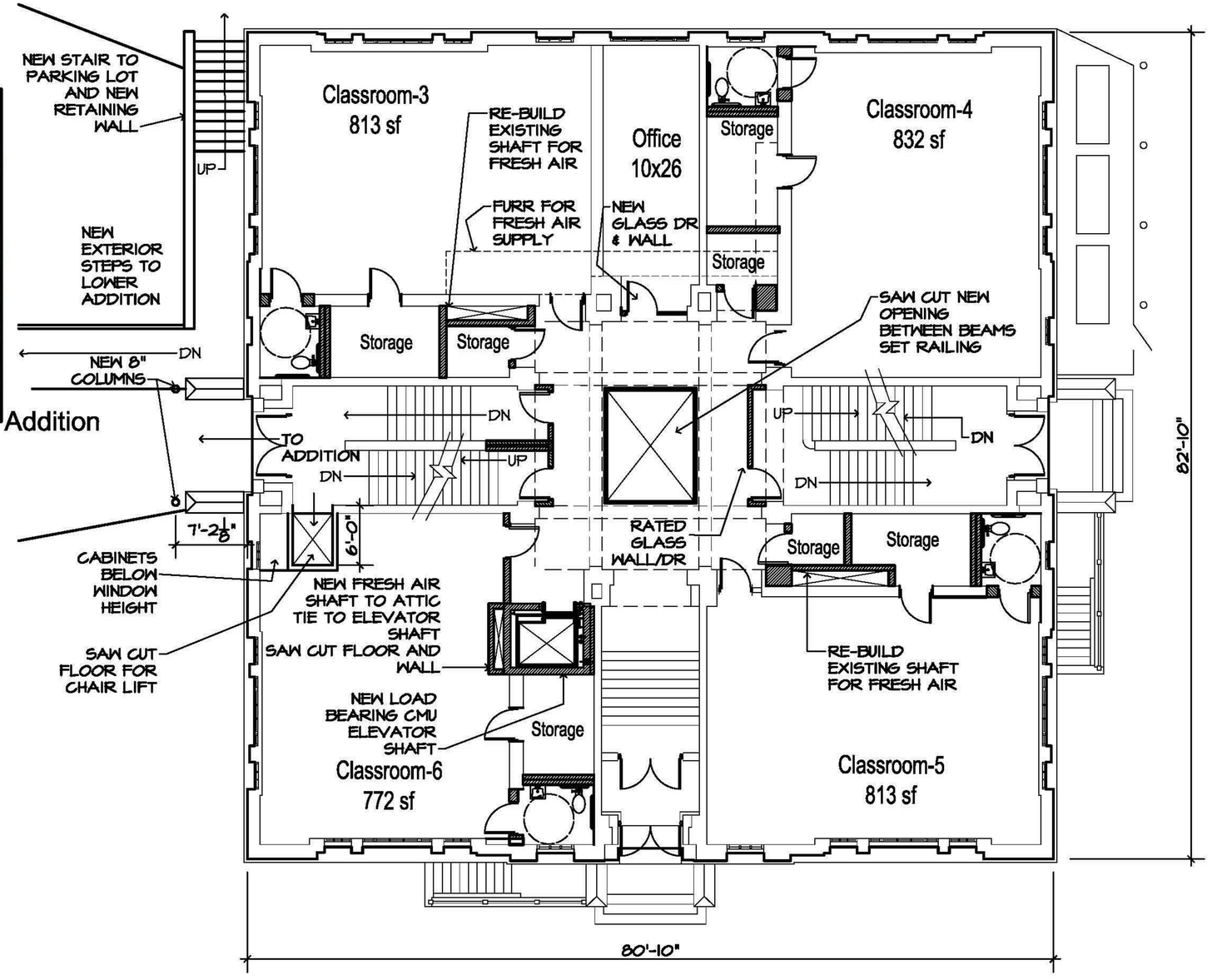

0- Street

A-2.0

1 SECOND LEVEL

SCALE: 3/32= 1'-0" 12-23-2013

DEMO Layer OFF

Addition

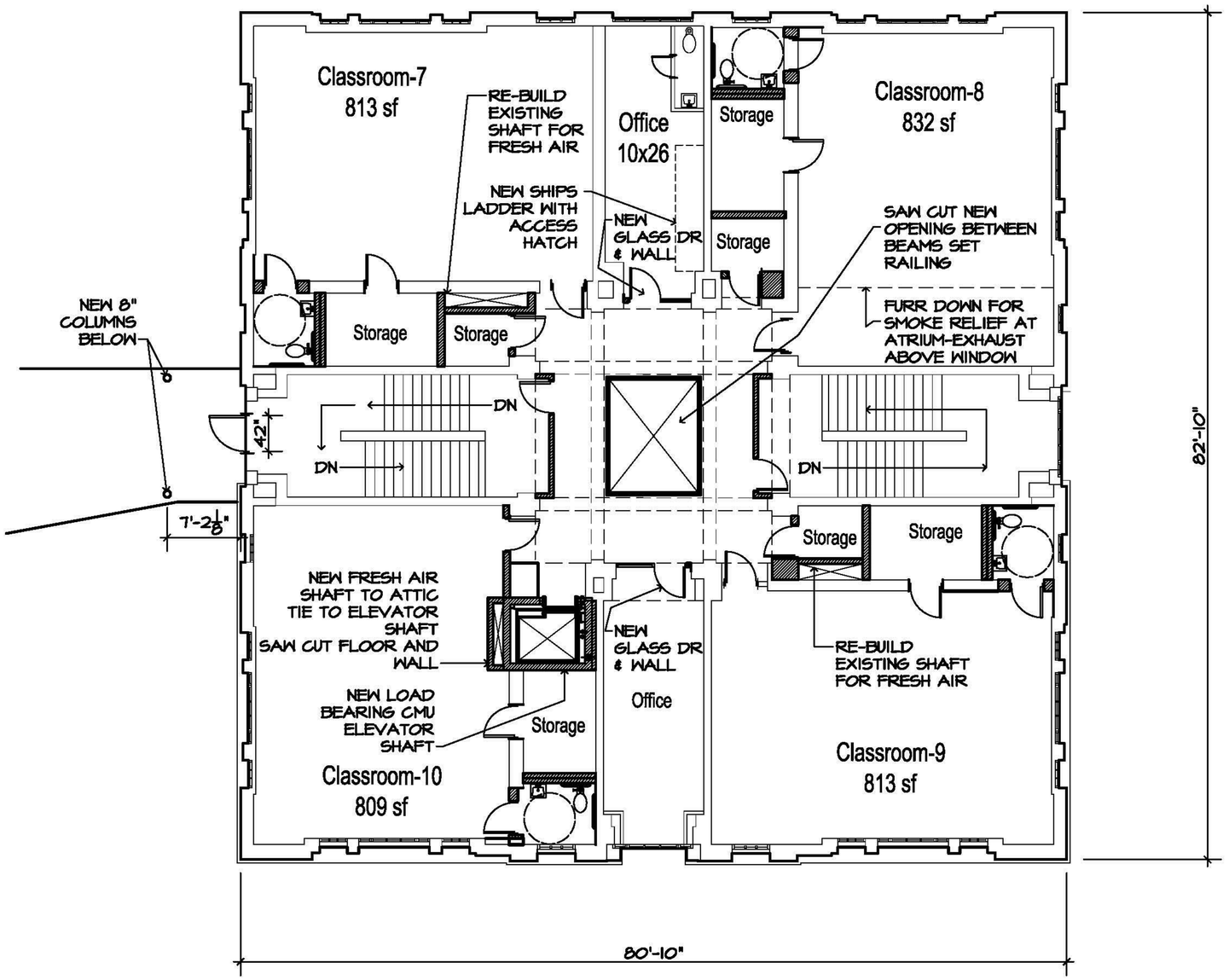

A-3.0

1 THIRD LEVEL

SCALE: 3/32= 1'-0" 12-23-2013

DEMO Layer OFF

0- Street

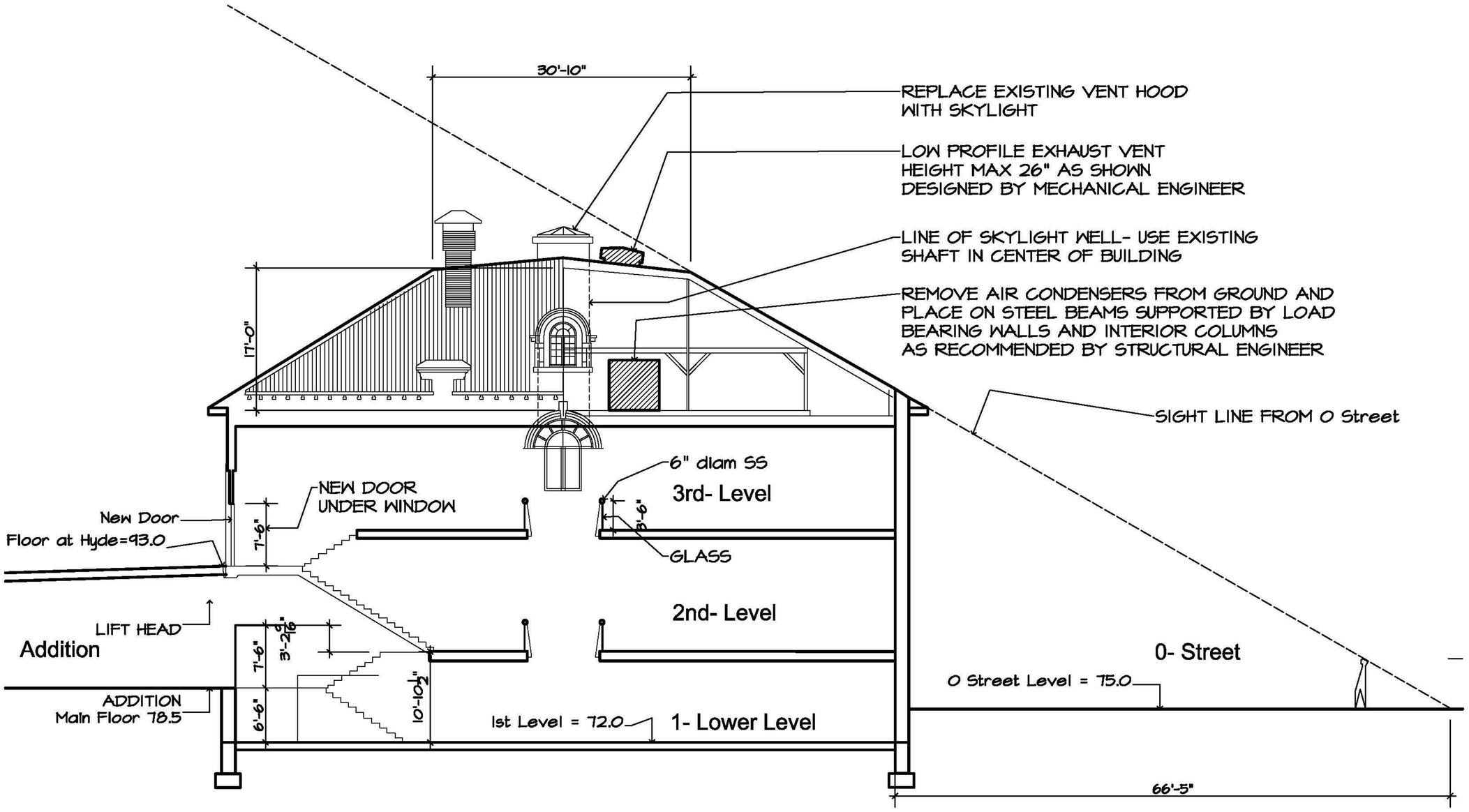

A-0.0

1 Section

SCALE: 3/32= 1'-0"

12-23-2013

Sight Line Analysis

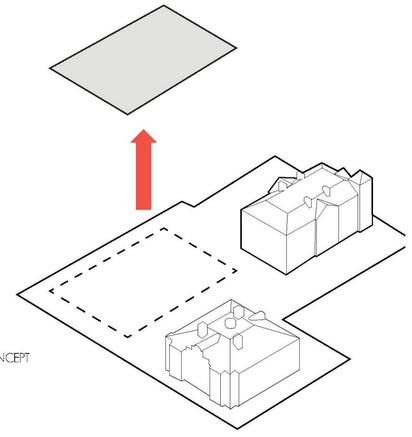

LIFT THE LAWN CONCEPT

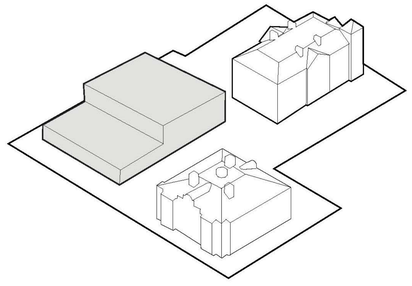

LIFT THE LAWN CONCEPT

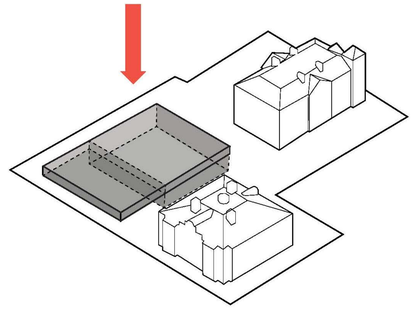

LIFT THE LAWN CONCEPT

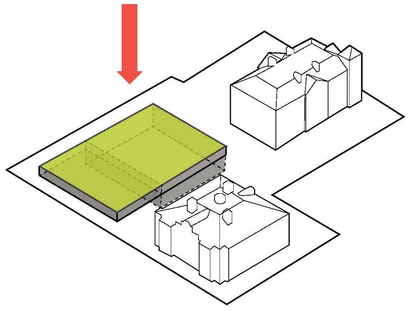

LIFT THE LAWN CONCEPT

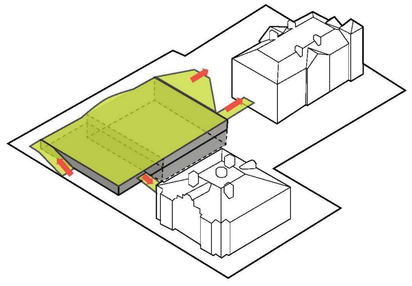

LIFT THE LAWN CONCEPT

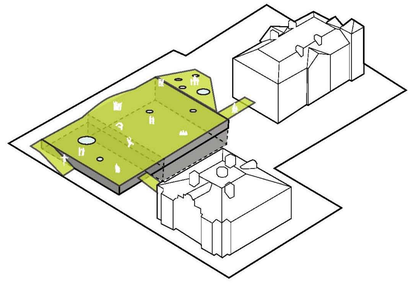

LIFT THE LAWN CONCEPT

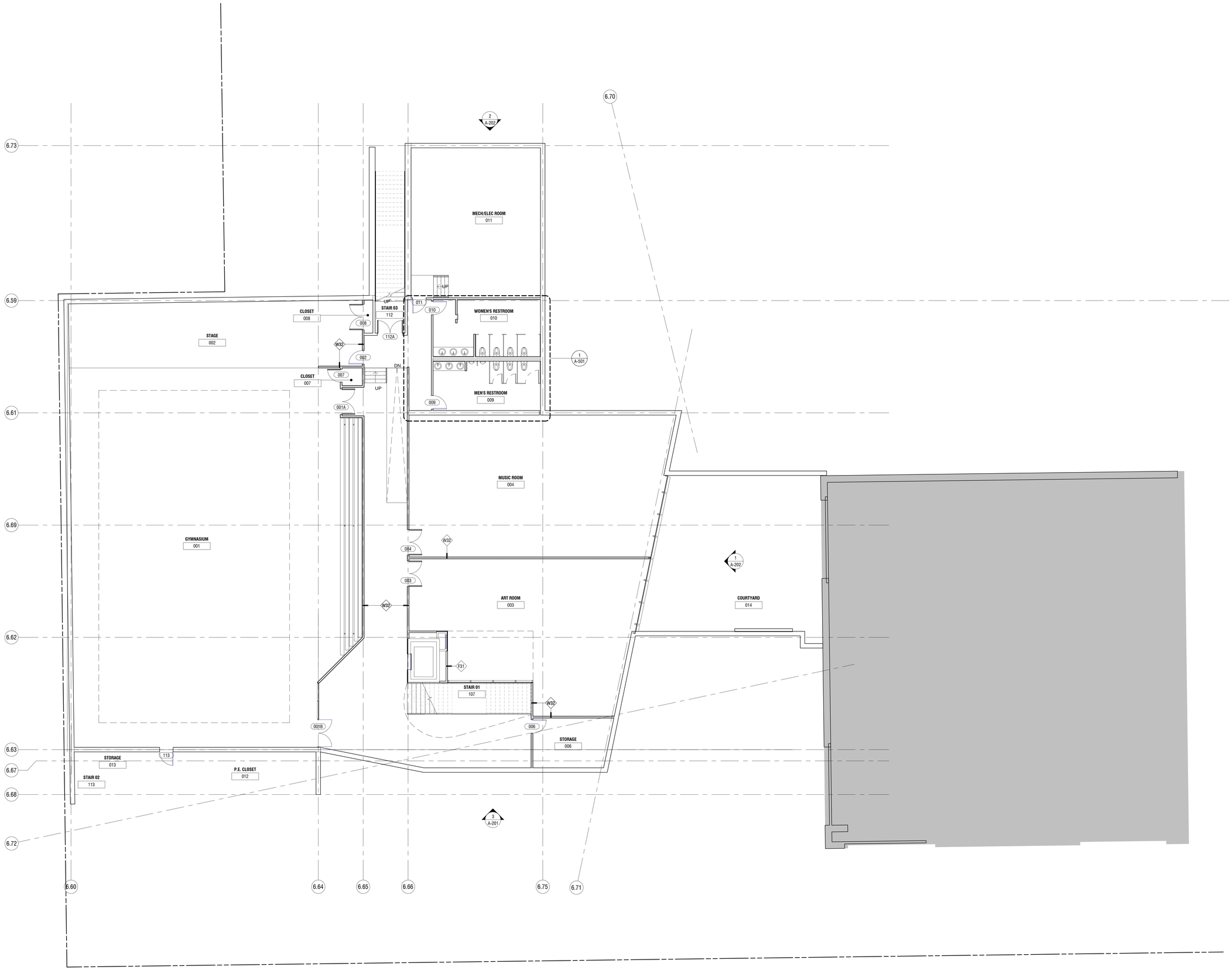

GRAPHIC SCALE

0 8 16 24 32

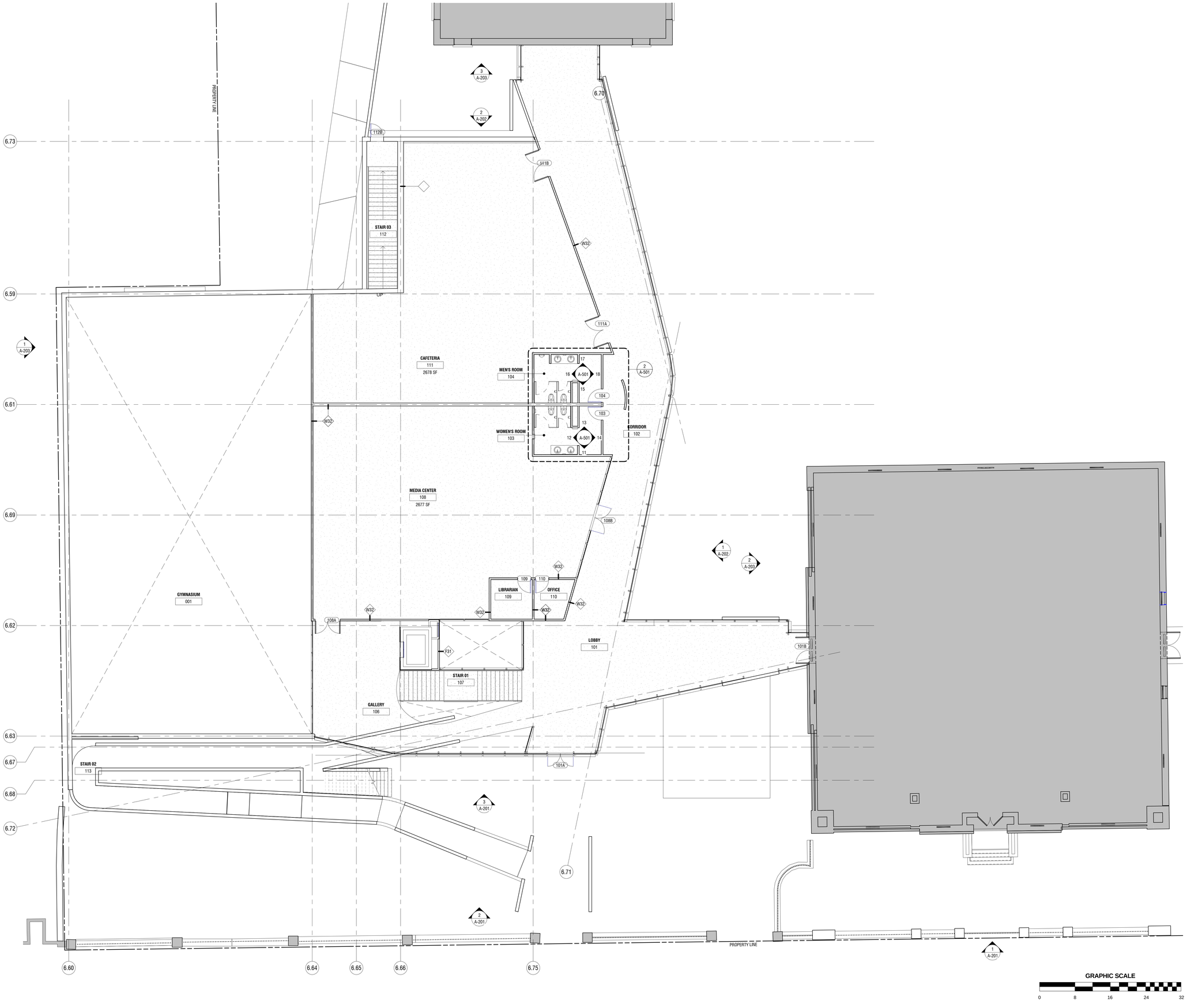

PROPERTY LINE
STAIR 03
112
CAFETERIA
111
2678 SF
MEN'S ROOM
104
WOMEN'S ROOM
103
CORRIDOR
102
MEDIA CENTER
108
2677 SF
GYMNASIUM
001
LIBRARIAN
109
OFFICE
110
LOBBY
101
STAIR 01
107
GALLERY
106
STAIR 02
113
PROPERTY LINE
GRAPHIC SCALE
0
8
16
24
32

NIC

3
A-203

2
A-202

6.70

6.73

PROPERTY LINE

6.59

1
A-203

6.61

6.69

1
A-202

2
A-203

6.62

NIC

6.63

6.67

8%

8%

10'-0"

8%

11'-0"

8%

6.68

7'-6"

8%

5'-0"

8%

2'-6"

3
A-201

8%

6.72

6.71

2
A-201

PROPERTY LINE

1
A-201

6.60

6.64

6.65

6.66

6.75

GRAPHIC SCALE

0 8 16 24 32

RANGE OF LANDSCAPE MATERIALS

*Selection of Play Equipment to be by DCDGS Playground Consultant

HYDE ADDISON ELEMENTARY
3219 O STREET NW
Washington, D.C. 20007

bloc atlantic and shinberg levinas -joint venture
OEHME, VAN SWEDEN & ASSOCIATES, INC.
01.08.2014

ENTRY PAVING ALTERNATIVES

Image: www.everlaststone.com

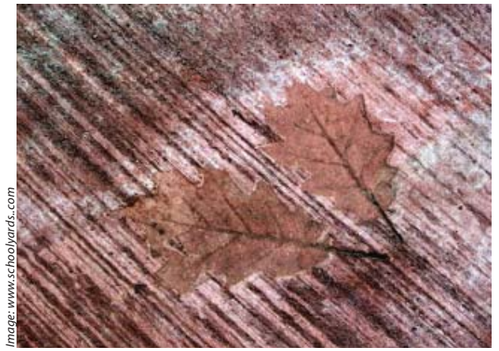

Image: www.schoolyards..com

CONCRETE WITH IMPRINTS

PROS

- Interesting learning opportunity
- Easy to maintain
- ADA accessible
- Versatile
- Durable
- Long-lasting

Image: n/a

Image: n/a

CONCRETE WITH AGGREGATE

PROS

- Can incorporate local stone
- Easy to maintain
- ADA accessible
- Versatile
- Durable
- Long-lasting

Image: Oehme, van Sweden & Associates

Image: www.pavestone.com

BRICK OR CONCRETE PAVERS

PROS

- Fits into historic context of neighborhood (Brick)
- Continuity with sidewalk material (Brick)
- Easy to maintain
- ADA accessible
- Versatile
- Durable
- Long-lasting

*Selection of Play Equipment to be by DCDGS Playground Consultant

CUSHIONED PLAY SURFACE

Image: Oehme, van Sweden & Associates

Image: Oehme, van Sweden & Associates

ENGINEERED WOOD FIBER

PROS

- Natural-look
- Non-toxic
- ADA accessible
- Versatile
- Easy to install
- Low maintenance cost

CONS

- Maintenance required (trash removal, needs to be swept back into place, holds moisture, can track into building)
- Can shift and become unlevel and difficult for wheelchairs
- Flammable
- Needs annual refurbishing to meet safety codes

Image: www.pebbleflex.com

Image: www.learningbytheyard.com

POURED-IN-PLACE RUBBER

PROS

- Seamless surface for play and sports
- Interesting colors and pattern options
- Easy to maintain
- ADA accessible
- Versatile
- Durable
- Long-lasting
- Can include painted "court" boundaries

CONS

- Synthetic material

*Selection of Play Equipment to be by DCDGS Playground Consultant

ACTIVE PLAY SURFACE

Image: Scoil Naomh Iosaf

Image: www.concretedecor.net

CONCRETE

PROS

- Easy to maintain
- ADA accessible
- Versatile
- Durable
- Long-lasting
- Can include painted or integral color shapes and court boundaries

CONS

- Not a "soft" safety surface for play

Image: www.pebbleflex.com

Image: www.learningbytheyard.com

POURED-IN-PLACE RUBBER

PROS

- Seamless surface for play and sports
- Interesting colors and pattern options
- Easy to maintain
- ADA accessible
- Versatile
- Durable
- Long-lasting
- Can include painted "court" boundaries

CONS

- Synthetic material

Image: www.flikr.com_driving impressions

Image: www.peacefulplaygrounds.com

ASPHALT

PROS

- Seamless surface for play and sports
- Easy to maintain
- ADA accessible
- Versatile
- Durable
- Long-lasting
- Can include painted "court" boundaries

CONS

- Not a "soft" safety surface for play
- Maintenance required

*Selection of Play Equipment to be by DCDGS Playground Consultant

LOOSE MATERIALS

Image: Place 2 Space

Image: n/a

SAND

PROS

- Inspires imaginative play
- Natural
- Versatile
- Drains well
- Non-flammable
- Economic

CONS

- Requires maintenance
- Must replenish displaced material
- May combine with dirt over time
- Foreign objects can be harbored in sand

Image: www.play-scapes.com

Image: Space 2 Place

STONE DUST

PROS

- Natural
- Can include local stone
- ADA accessible
- Versatile
- Durable

CONS

- Requires maintenance
- Must replenish displaced material

Image: www.play-scapes.com

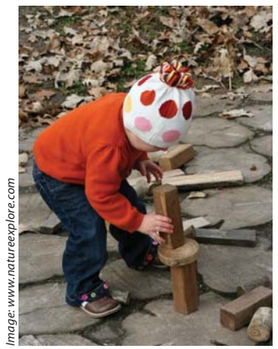

Image: www.natureexplore.com

Image: www.play-scapes.com

TREE COOKIES

PROS

- Natural
- Encourages exploration and play
- Versatile
- Durable

*Selection of Play Equipment to be by DCDGS Playground Consultant